LC-6500HR
EXERCISE BIKE

GE09-00009-XXXX

SN # 475-499, 820000-821999

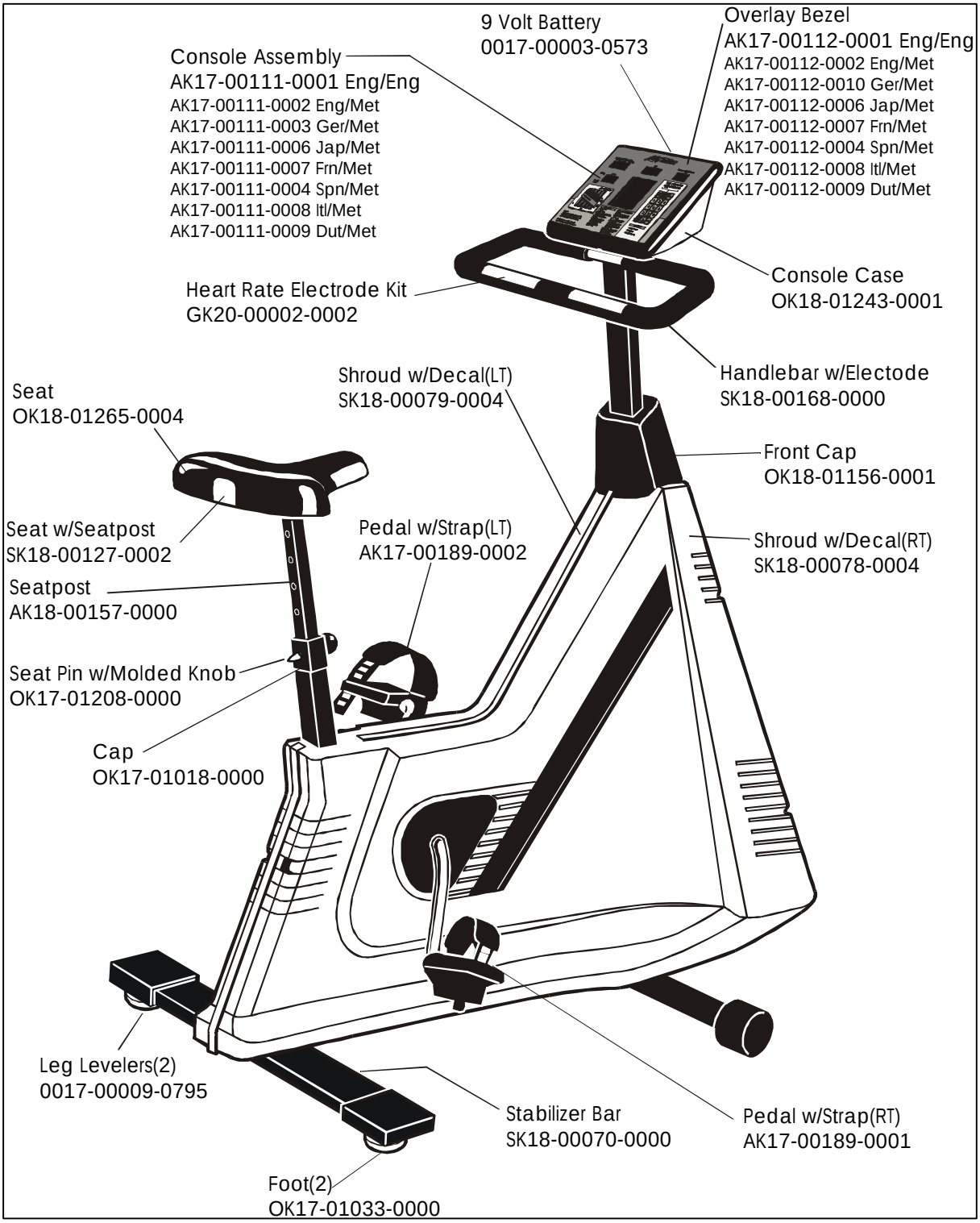

Revision Date: 1/20/99

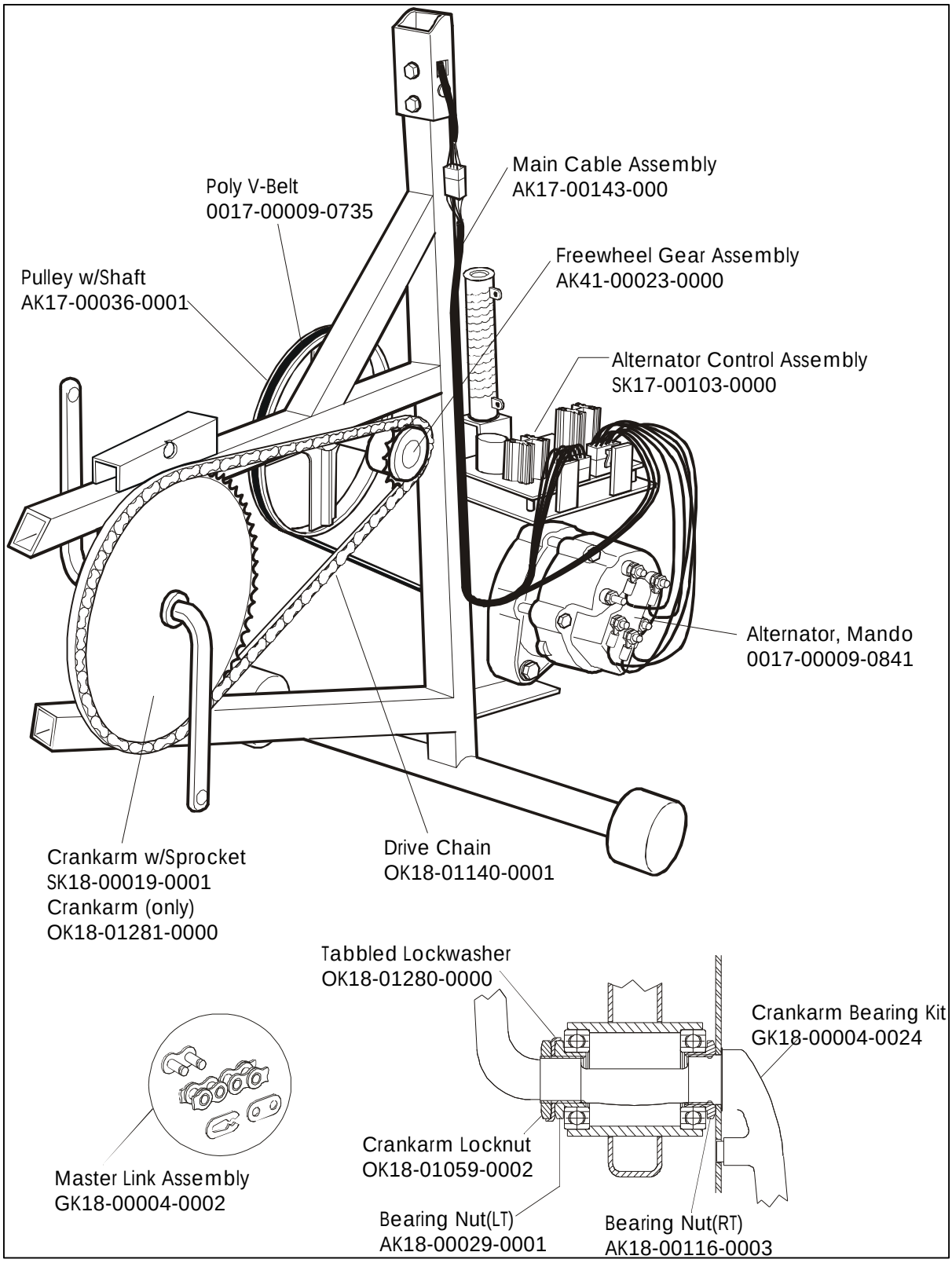
Main Cable Assembly
AK17-00143-000
Poly V-Belt
0017-00009-0735
Freewheel Gear Assembly
AK41-00023-0000
Pulley w/Shaft
AK17-00036-0001
Alternator Control Assembly
SK17-00103-0000
Alternator, Mando
0017-00009-0841
Crankarm w/Sprocket
SK18-00019-0001
Crankarm (only)
OK18-01281-0000
Drive Chain
OK18-01140-0001
Tabbled Lockwasher
OK18-01280-0000
Crankarm Bearing Kit
GK18-00004-0024
Crankarm Locknut
OK18-01059-0002
Master Link Assembly
GK18-00004-0002
Bearing Nut(LT)
AK18-00029-0001
Bearing Nut(RT)
AK18-00116-0003